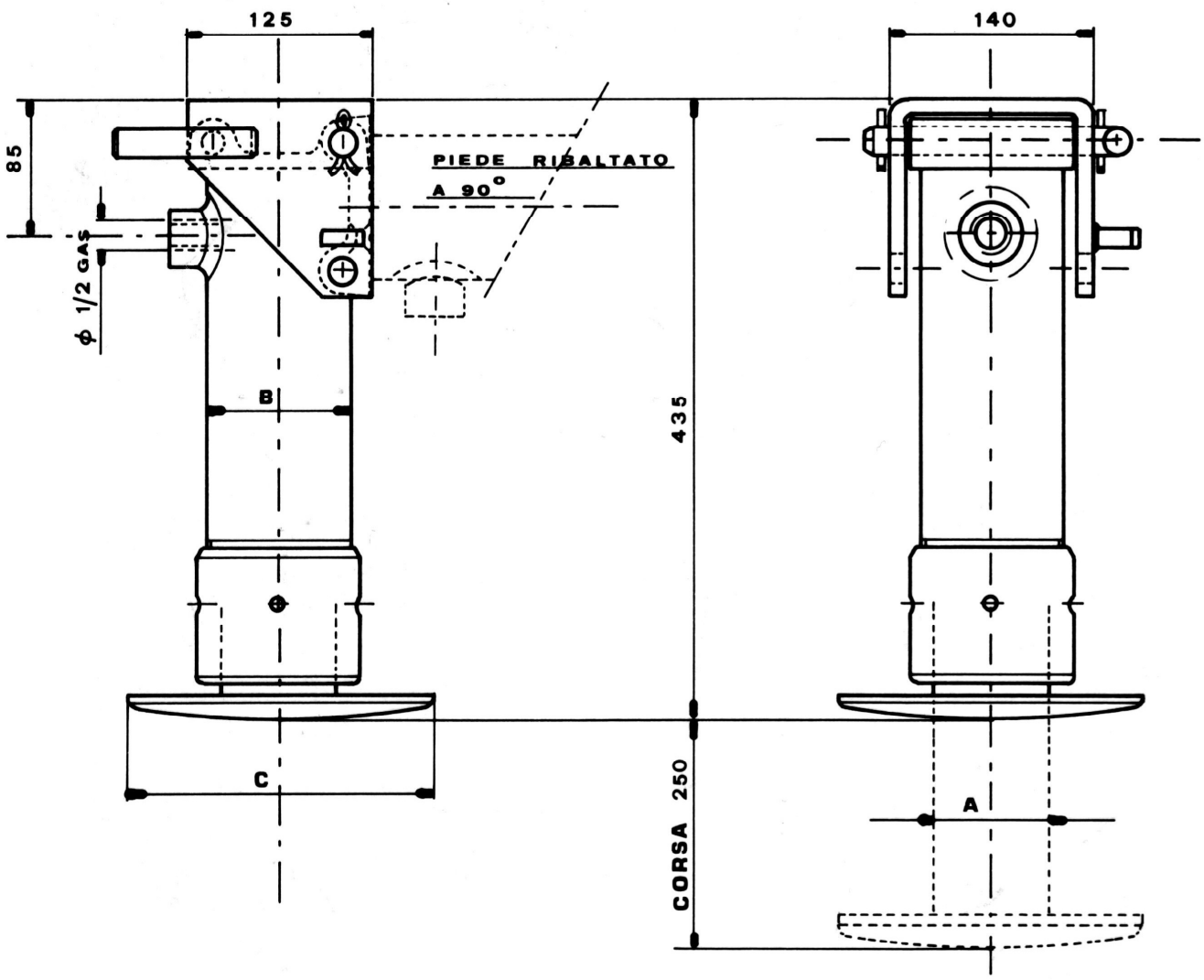

Tipo Type Type	DIMENSIONI DIMENSIONS				Corsa utile Course Lift mm.	Cap. olio Capacité Capacity lt.	Peso kg. Poids kg. Weight kg.	PORTATA TON. CHARGE CAPACITY					
	A	B	C					Bar 100	Bar 150				
3530/85	85	100	215		250	1,5	21	5,67	8,5				