TELESCOPIC CYLINDER

TYPE : BI

SERIE : Ø165/4

Ihre erste Wahl.

AGRO-CENTER Fliegl

Technical Characteristics

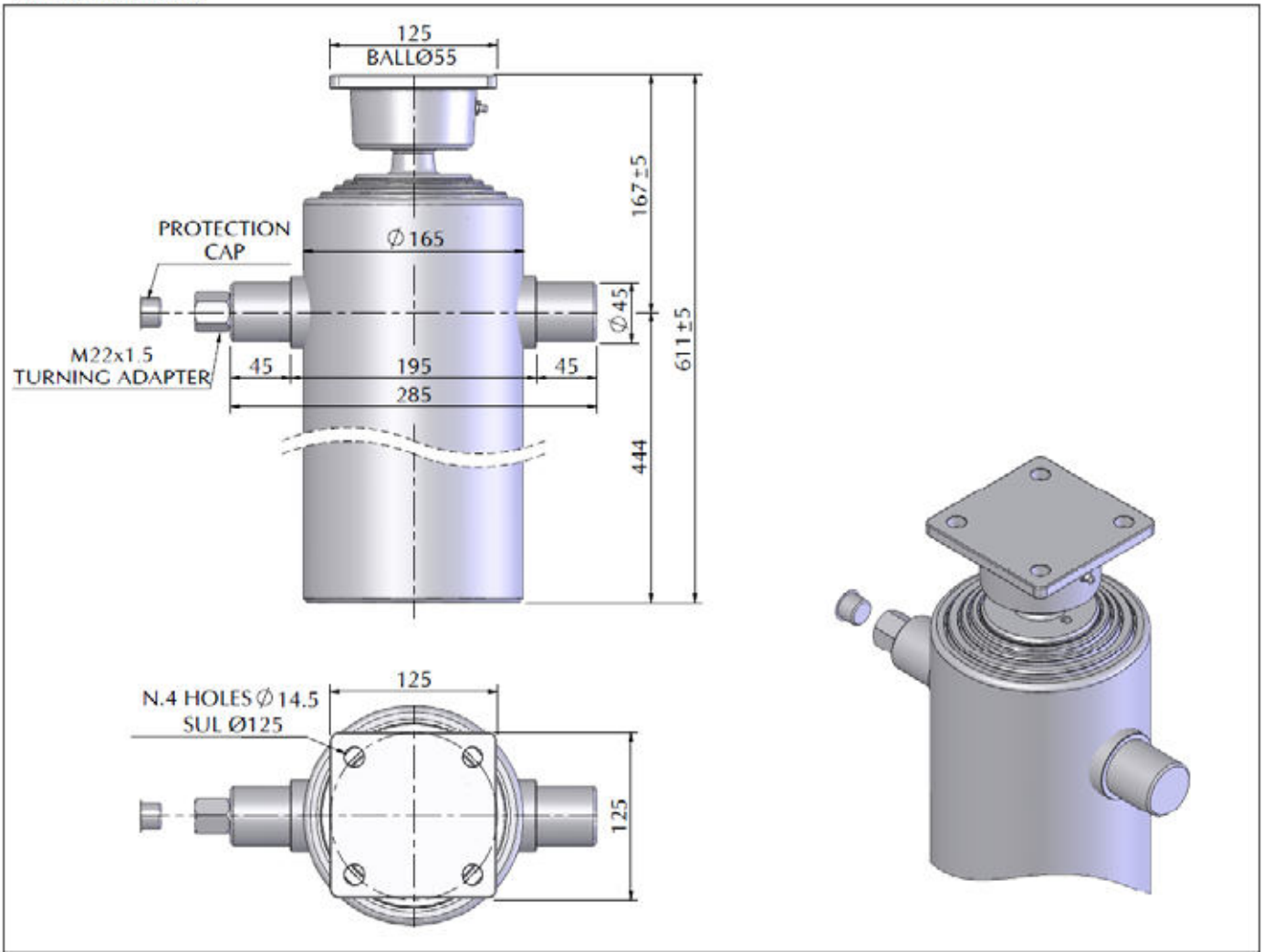

Cylinder stages

Ø Stage	Ø032	Ø045	Ø060	Ø075	Ø090	Ø105	Ø120	Ø140	Ø160							
Thrust at 150 Bar [Tons]	---	---	---	---	9.50	13.00	17.00	23.10	---							
Stages of cylinder					●	●	●	●								

Specifications

Stages number		04
Cylinder Stroke	[mm]	1700
Cylinder weight only	[kgs]	62.60
Working volume	[Ltrs]	21.40
Max Working pressure	[Bar]	180

Brackets and Accessories

Closed brackets [2 Units per cylinder]	SC#ESSIN	1.00 [Kgs] x 2=
Open brackets [2 Units per cylinder]	SSA#E	0.80 [Kgs] x 2=
Cradle Type	CU#GG	15.75 [Kgs] x 1=

Technical Information

- ❑ Oil : See oil specification sheet
- ❑ Tipping weight : Net weight + Payload

Recommendation

- ❑ This Mariz cylinder is designed as a lifting device only
- ❑ It must not be used as a structural member or be subject to side loads
- ❑ Pump flow in consultation with Mariz engineering department

Advices

All our cylinders are manufactured to suit the particular application in the differing world markets/climate. Should you require details of the exact lifting capacity of the cylinder that has been selected for your application/veichle then please contact our technical department who will be only pleased to explain or advise.